A2G400N1200MEK6B

1200V SiC MOSFET Module

Features

- High-Frequency Operation
- High Current Density
- Normally-off, Fail-safe Device Operation
- Low Inductive Design
- Integrated NTC temperature sensor
- Zero Turn-off Tail Current from MOSFET

Applications

- High Frequency Switching application
- DC/DC converter
- DC charger for EV
- Welding

Product Summary

V_{DS}	1200V
I_D	400A



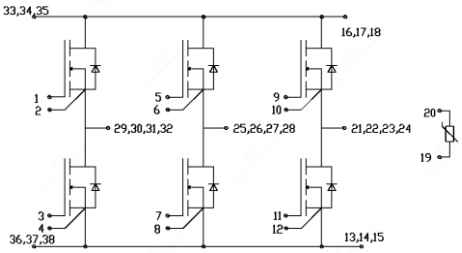

Package

Symbol	Parameter	Value	Unit
V_{isol}	Isolation test voltage (f=50Hz, t=1min)	3.0	kV
L_{Stray}	Stray inductance	20	nH
T_J, T_{stg}	Junction and Storage Temperature Range	-40 to +150	°C
M_s	Mounting Torque for Module Mounting, Screw M5	3 – 6	Nm
$R_{\theta JC}$	Thermal Resistance, Junction-to-heatsink	0.12	°C/W
M	Weight	300	g

Absolute Maximum Ratings (T_C=25°C unless otherwise specified)

Symbol	Parameter	Value	Unit
V_{DS}	Drain-Source Voltage	1200	V
V_{GS}	Gate-Source Voltage	-10/+22	V
I_D	Drain Current (continuous)	400	A
I_{DRM}	Drain Current (pulsed)	800	A

Electrical Characteristics (T_C=25°C unless otherwise specified)

Symbol	Parameter	Test Conditions	Min.	Typ.	Max.	Unit
BV_{DS}	Drain-source Break down Voltage	V_{GS}=0V	1200			V
I_{DSS}	Zero Gate Voltage Drain Current	V_{DS}=1200V, V_{GS}=0V			200	uA
I_{GSS}	Gate-body Leakage Current	V_{DS}=0V, V_{GS}=20V			2	uA
$V_{GS(th)}$	Gate Threshold Voltage	V_{DS}=V_{GS}, I_D=40mA	2		4	V
$R_{DS(on)}$	Static Drain-source On Resistance	V_{GS}=18V, I_D=200A		4	5.5	mΩ
V_{GSon}	Recommended turn-on Voltage	Static		18		V
V_{GSoff}	Recommended turn-off Voltage			-5		V
R_G	Gate Resistance	V_{GS}=0V, f=1MHz		0.8		Ω
C_{iss}	Input Capacitance	V_{DS}=1000V, f=1MHz V_{AC}=25mV		27500		pF
C_{oss}	Output Capacitance			11500		
C_{rss}	Reverse Transfer Capacitance			52		

E_{on}	Turn-On Switching Energy	V_{DD}=800V, V_{GS}=-5/+18V		10.4		mJ
E_{off}	Turn-Off Switching Energy	I_D=200A, Load=100uH		2.9		mJ
Q_{GS}	Gate-Source Charge	V_{DD}=800V		306.7		nC
Q_{GD}	Gate-Drain Charge	V_{GS}=-5/+18V		312.9		
Q_G	Total Gate Charge	I_D=200A		952		
$t_{d(on)}$	Turn-on Delay Time	V_{DD}=800V		104		ns
t_r	Rise Time	V_{GS}=-5/+18V, I_D=200A		68		
$t_{d(off)}$	Turn-off Delay Time	R_{Gext}= 5Ω		328		
t_f	Fall Time			69		

Typical Performance-Reverse Diode (T_J=25°C unless otherwise specified)

Symbol	Parameter	Test Conditions	Min.	Typ.	Max.	Unit
V_{FSD}	Forward Voltage	V_{GS}=0V, I_F=200A			6	V
I_S	Continuous Diode Forward Current	V_{GS}=0V, T_C=25°C		200		A
t_{rr}	Reverse Recovery Time	V_{GS}=-5/+18 V, I_F=200A		55		ns
Q_{rr}	Reverse Recovery Charge	V_R=800V		2452		nC
I_{rrm}	Peak Reverse Recovery Current			76		A

NTC-Thermistor

Symbol	Parameter	Test Conditions	Min.	Typ.	Max.	Unit
R_{25}	Rated resistance	T_{NTC}=25°C		5.00		kΩ
ΔR/R	Deviation of R_{100}	T_{NTC}=25°C, R_{100}=493.3Ω	-5		5	%
$B_{25/50}$	B-value	$R_2=R_{25}\exp[B_{25/50}(1/T_2-1(298{,}15\ K))]$		3375		k
$B_{25/80}$	B-value	$R_2=R_{25}\exp[B_{25/80}(1/T_2-1(298{,}15\ K))]$		3414		k
$B_{25/100}$	B-value	$R_2=R_{25}\exp[B_{25/100}(1/T_2-1(298{,}15\ K))]$		3436		k

Typical Performance

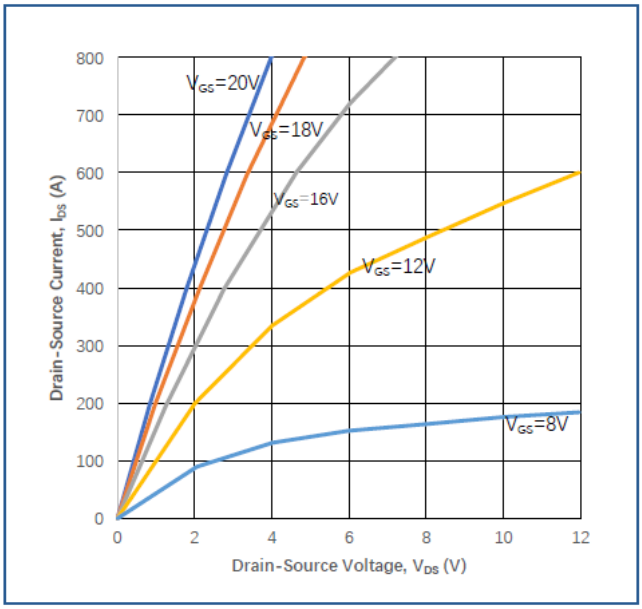

Figure 1

Output Characteristics (T_J=25 °C)

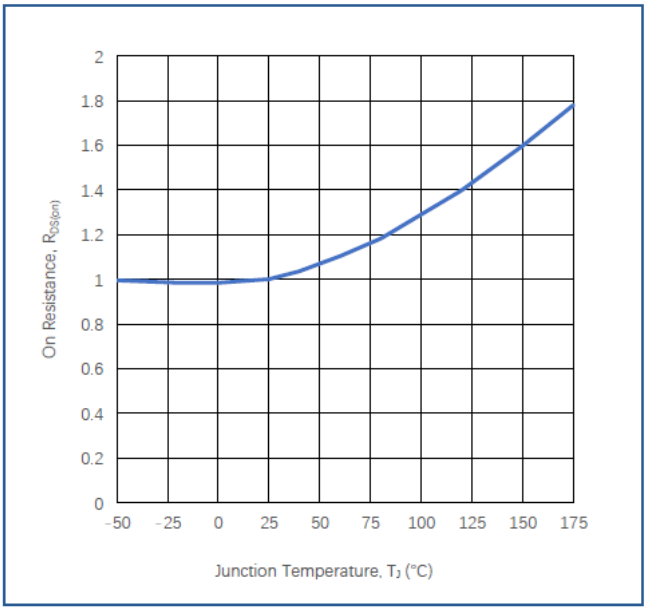

Figure 2

Normalized on-resistance vs. Temperature

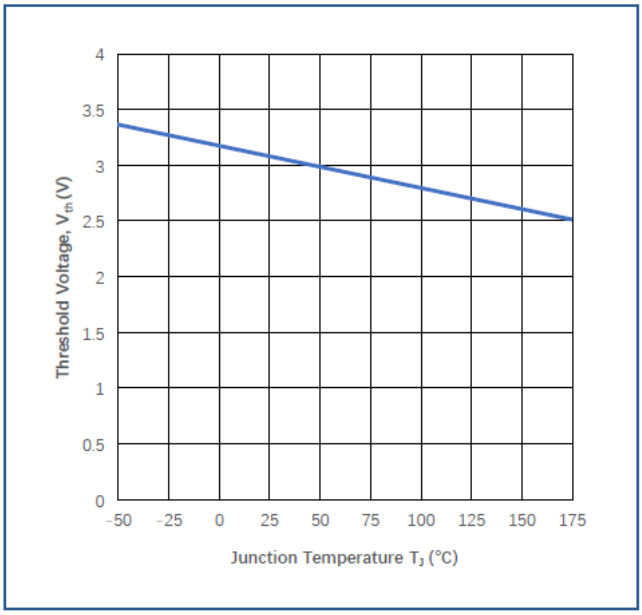

Figure 3

Threshold Voltage vs. Temperature

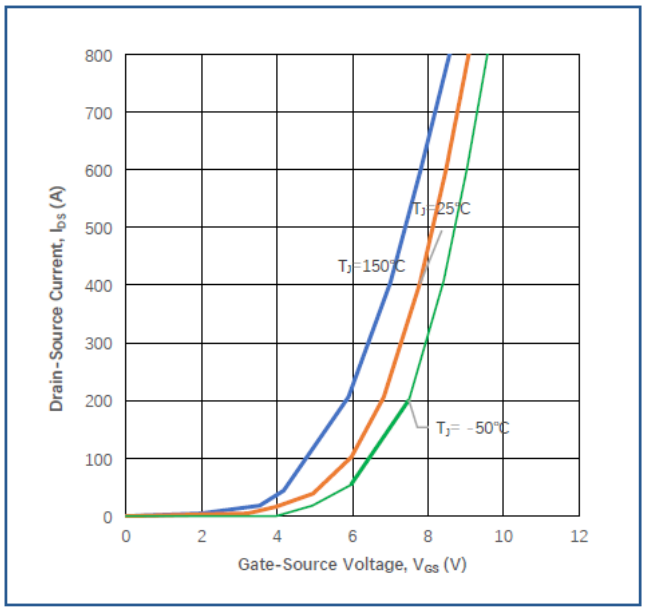

Figure 4

Transfer Characteristic for Various T_J

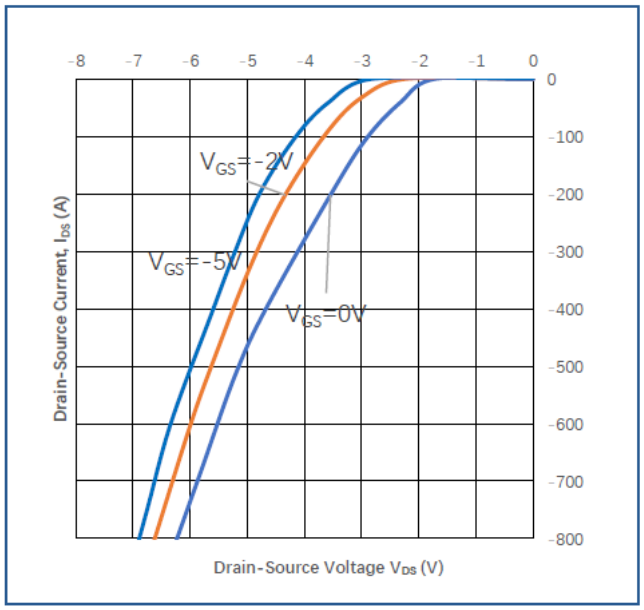

Figure 5

Diode Characteristic at 25 °C

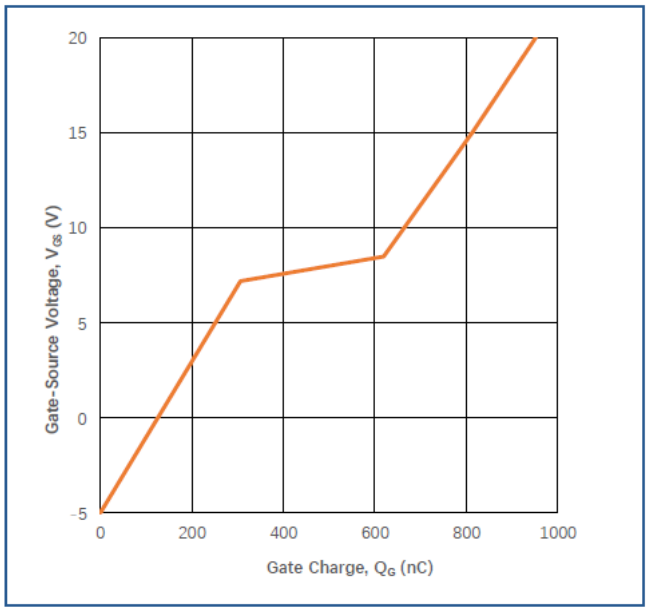

Figure 6

Typical Gate Charge Characteristics

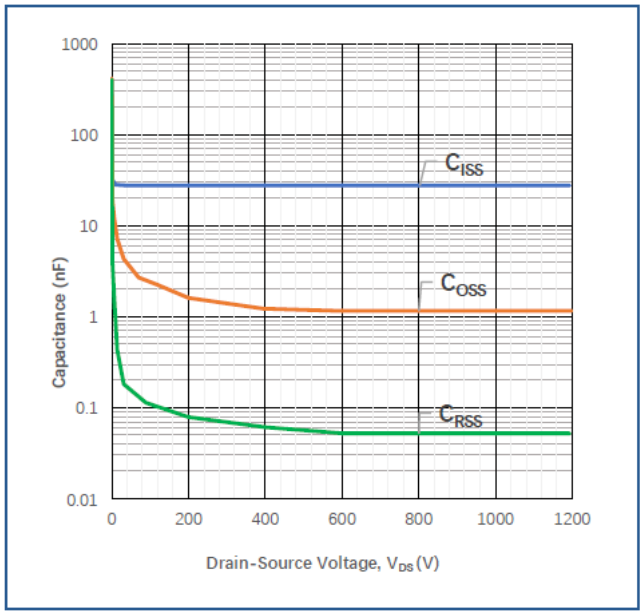

Figure 7

Typical Capacitances vs. Drain-source Voltage

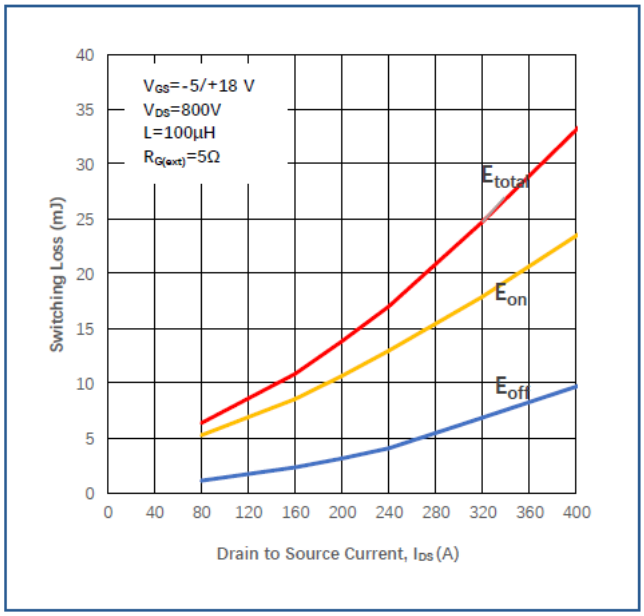

Figure 8

Inductive Switching Energy vs. Drain Current

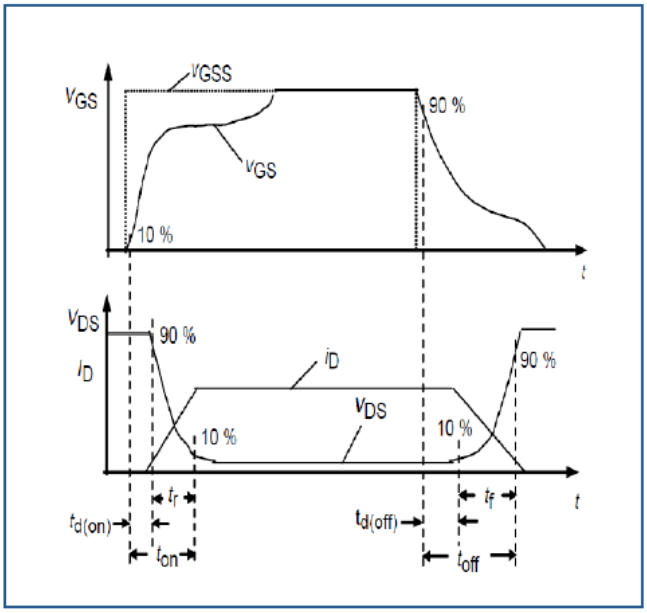

Figure 9

Switching Time Description

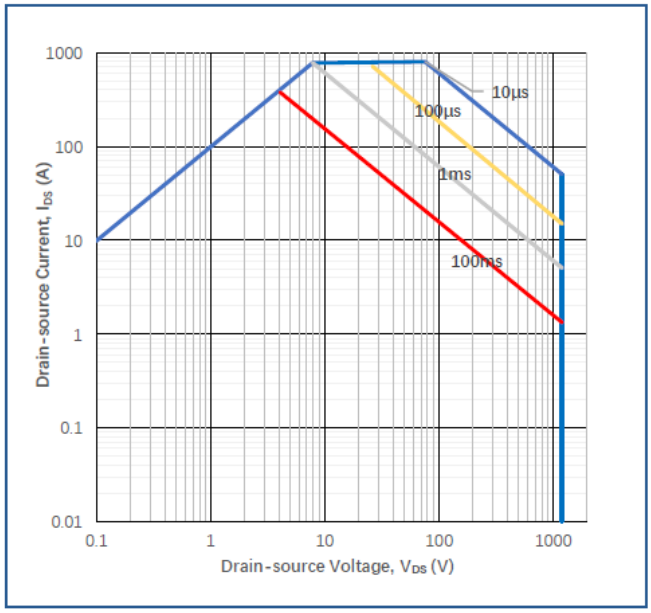

Figure 10

Safe Operating Area

Circuit Diagram

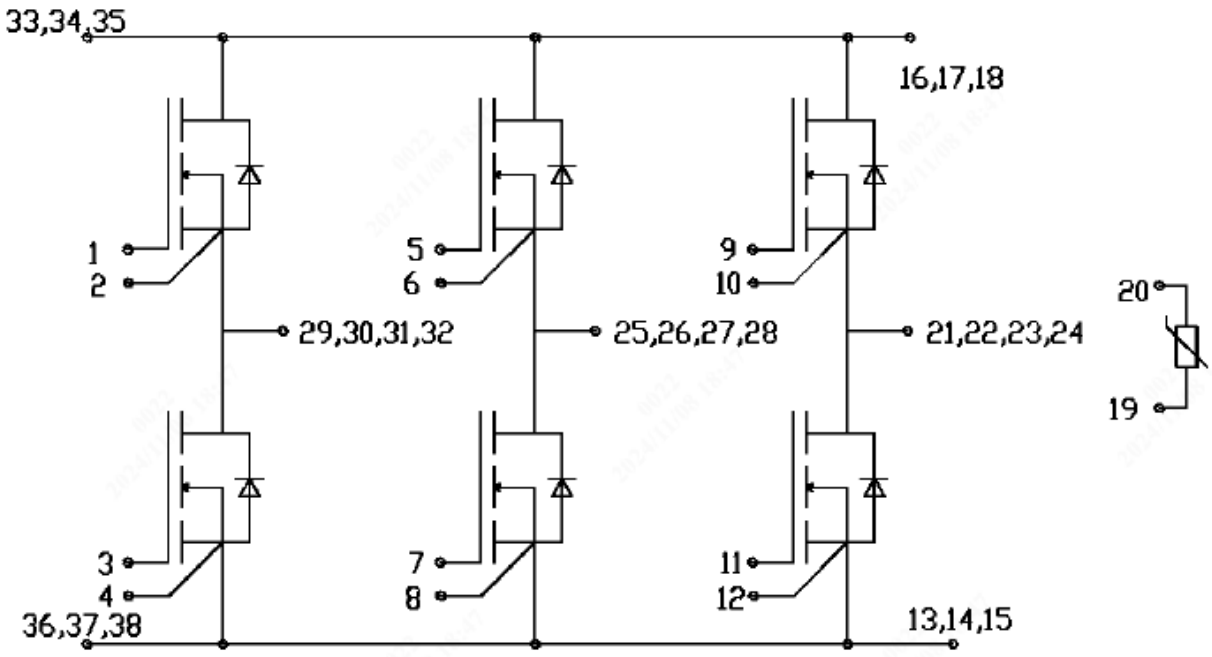

Package Drawing (mm)

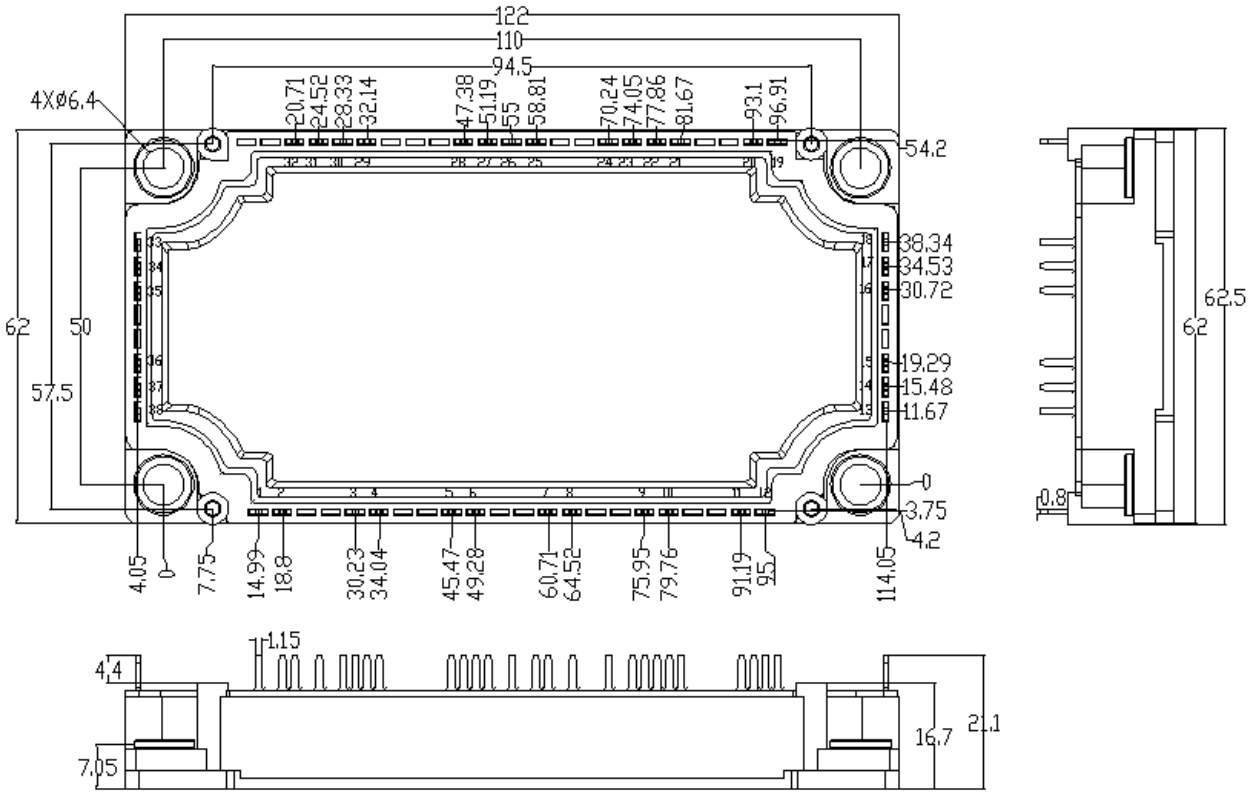

Revision version	Description	Date
1.0	Initial	05.2025