# A2G300N1200MEK6B

## 1200V SiC MOSFET Module

### Features

- High-Frequency Operation
- High Current Density
- Normally-off, Fail-safe Device Operation
- Low Inductive Design
- Integrated NTC temperature sensor
- Zero Turn-off Tail Current from MOSFET

### Applications

- High Frequency Switching application
- DC/DC converter
- DC charger for EV
- Welding

### Product Summary

| | |
|---|---|
| $V_{DS}$ | 1200V |
| $I_D$ | 300A |



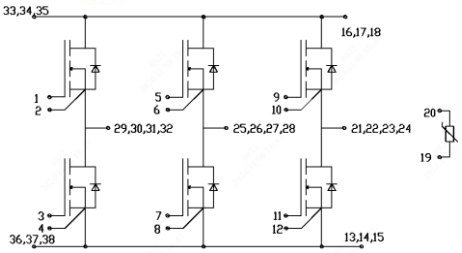


### Package

| Symbol | Parameter | Value | Unit |
|---|---|---|---|
| $V_{isol}$ | Isolation test voltage (f=50Hz, t=1min) | 2.5 | kV |
| $L_{Stray}$ | Stray inductance | 20 | nH |
| $T_J$, $T_{stg}$ | Junction and Storage Temperature Range | -40 to +150 | °C |
| $M_s$ | Mounting Torque for Module Mounting, Screw M5 | 3 – 6 | Nm |
| $R_{\theta JC}$ | Thermal Resistance, Junction-to-heatsink | 0.12 | °C/W |
| M | Weight | 300 | g |

### Absolute Maximum Ratings ($T_C$=25°C unless otherwise specified)

| Symbol | Parameter | Value | Unit |
|---|---|---|---|
| $V_{DS}$ | Drain-Source Voltage | 1200 | V |
| $V_{GS}$ | Gate-Source Voltage | -10/+22 | V |
| $I_D$ | Drain Current (continuous) | 300 | A |
| $I_{DRM}$ | Drain Current (pulsed) | 600 | A |

### Electrical Characteristics ($T_C$=25°C unless otherwise specified)

| Symbol | Parameter | Test Conditions | Min. | Typ. | Max. | Unit |
|---|---|---|---|---|---|---|
| $BV_{DS}$ | Drain-source Break down Voltage | $V_{GS}$=0V | 1200 | | | V |
| $I_{DSS}$ | Zero Gate Voltage Drain Current | $V_{DS}$=1200V, $V_{GS}$=0V | | | 150 | uA |
| $I_{GSS}$ | Gate-body Leakage Current | $V_{DS}$=0V, $V_{GS}$=20V | | | 1.5 | uA |
| $V_{GS(th)}$ | Gate Threshold Voltage | $V_{DS}$=$V_{GS}$, $I_D$=30mA | 2 | | 4 | V |
| $R_{DS(on)}$ | Static Drain-source On Resistance | $V_{GS}$=18V, $I_D$=150A | | 5.3 | 7.3 | mΩ |
| $V_{GSon}$ | Recommended turn-on Voltage | Static | | 18 | | V |
| $V_{GSoff}$ | Recommended turn-off Voltage | | | -5 | | V |
| $R_G$ | Gate Resistance | $V_{GS}$=0V, f=1MHz | | 1.1 | | Ω |
| $C_{iss}$ | Input Capacitance | $V_{DS}$=1000V, f=1MHz<br>$V_{AC}$=25mV | | 20600 | | pF |
| $C_{oss}$ | Output Capacitance | | | 8600 | | |
| $C_{rss}$ | Reverse Transfer Capacitance | | | 39 | | |

| | | | | | | |
|---|---|---|---|---|---|---|
| $E_{on}$ | Turn-On Switching Energy | $V_{DD}$=800V, $V_{GS}$=-5/+18V | | 10.6 | | mJ |
| $E_{off}$ | Turn-Off Switching Energy | $I_D$=150A, Load=100uH | | 8.2 | | mJ |
| $Q_{GS}$ | Gate-Source Charge | $V_{DD}$=800V | | 230 | | nC |
| $Q_{GD}$ | Gate-Drain Charge | $V_{GS}$=-5/+18V | | 235 | | |
| $Q_G$ | Total Gate Charge | $I_D$=150A | | 714 | | |
| $t_{d(on)}$ | Turn-on Delay Time | $V_{DD}$=800V | | 103 | | ns |
| $t_r$ | Rise Time | $V_{GS}$=-5/+18V, $I_D$=150A | | 62 | | |
| $t_{d(off)}$ | Turn-off Delay Time | $R_{Gext}$= 5Ω | | 286 | | |
| $t_f$ | Fall Time | | | 72 | | |

## Typical Performance-Reverse Diode ($T_J$=25°C unless otherwise specified)

| Symbol | Parameter | Test Conditions | Min. | Typ. | Max. | Unit |
|---|---|---|---|---|---|---|
| $V_{FSD}$ | Forward Voltage | $V_{GS}$=0V, $I_F$=150A | | | 6 | V |
| $I_S$ | Continuous Diode Forward Current | $V_{GS}$=0V, $T_C$=25°C | | 150 | | A |
| $t_{rr}$ | Reverse Recovery Time | $V_{GS}$=-5/+18 V, $I_F$=150A | | 59 | | ns |
| $Q_{rr}$ | Reverse Recovery Charge | $V_R$=800V | | 1839 | | nC |
| $I_{rrm}$ | Peak Reverse Recovery Current | | | 67 | | A |

## NTC-Thermistor

| Symbol | Parameter | Test Conditions | Min. | Typ. | Max. | Unit |
|---|---|---|---|---|---|---|
| $R_{25}$ | Rated resistance | $T_{NTC}$=25°C | | 5.00 | | kΩ |
| ΔR/R | Deviation of $R_{100}$ | $T_{NTC}$=25°C, $R_{100}$=493.3Ω | -5 | | 5 | % |
| $B_{25/50}$ | B-value | $R_2=R_{25}\exp[B_{25/50}(1/T_2-1(298{,}15\ K))]$ | | 3375 | | k |
| $B_{25/80}$ | B-value | $R_2=R_{25}\exp[B_{25/80}(1/T_2-1(298{,}15\ K))]$ | | 3414 | | k |
| $B_{25/100}$ | B-value | $R_2=R_{25}\exp[B_{25/100}(1/T_2-1(298{,}15\ K))]$ | | 3436 | | k |

## Typical Performance

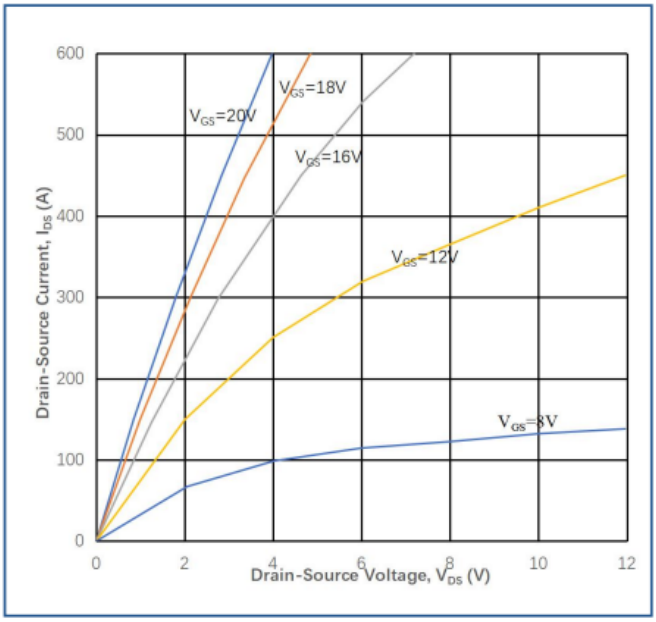


**Figure 1**

Output Characteristics ($T_J$=25 °C)

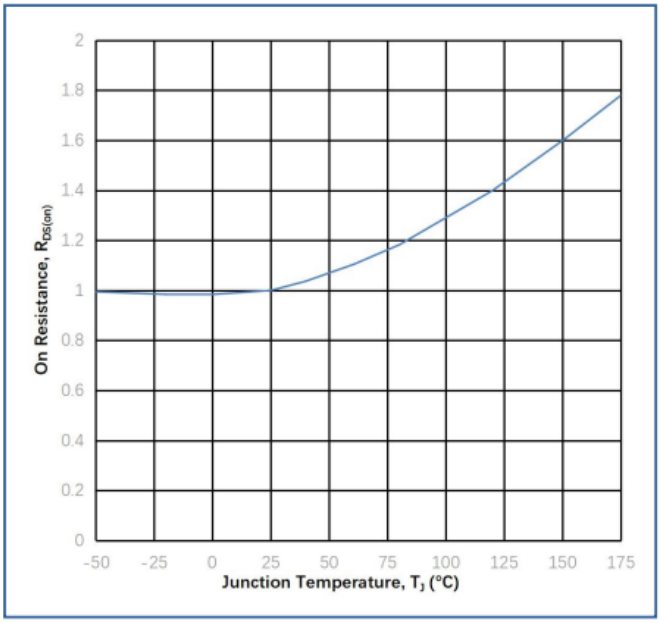


**Figure 2**

Normalized on-resistance vs. Temperature

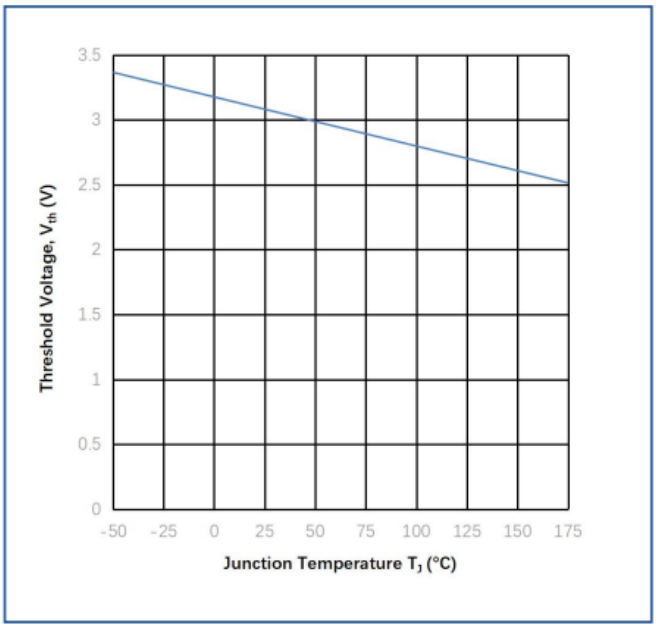


**Figure 3**

Threshold Voltage vs. Temperature

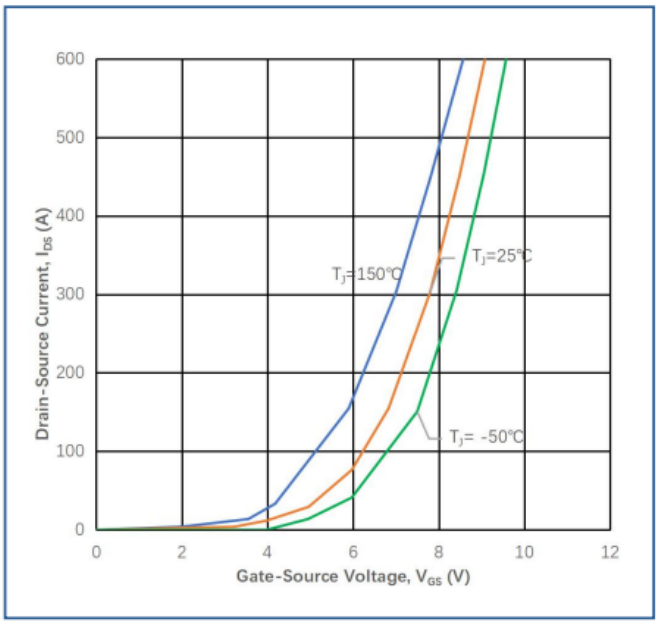


**Figure 4**

Transfer Characteristic for Various $T_J$

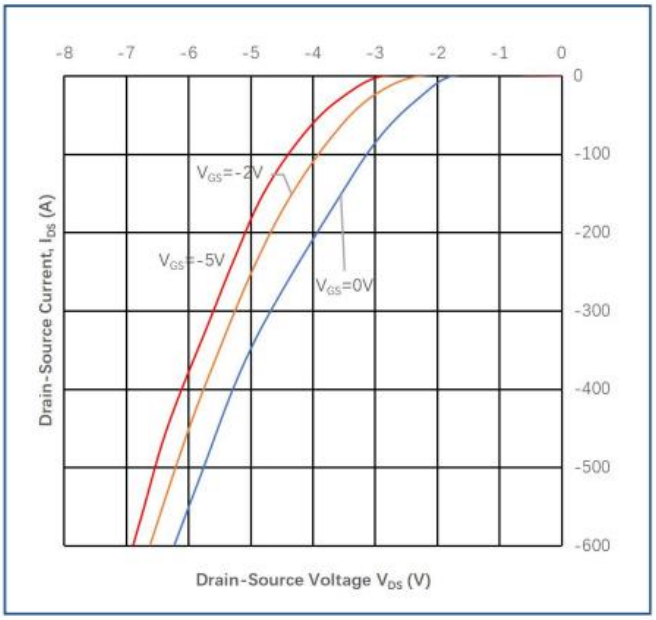


**Figure 5**

Diode Characteristic at 25 ˚C

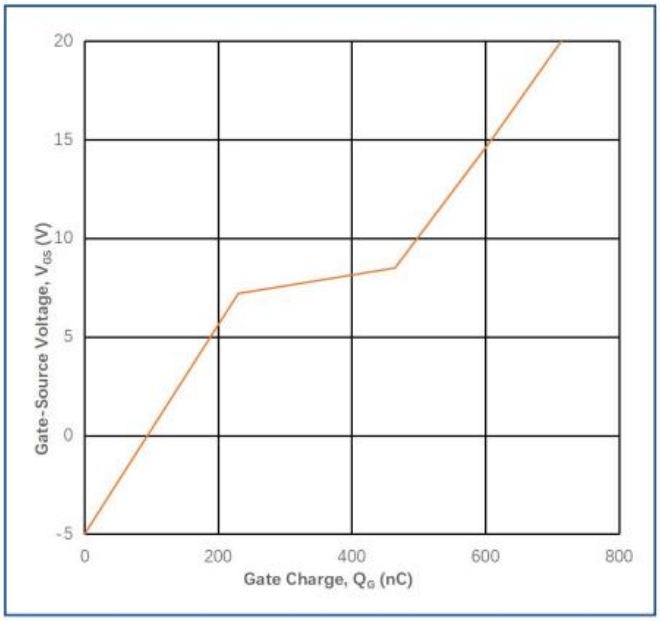


**Figure 6**

Typical Gate Charge Characteristics

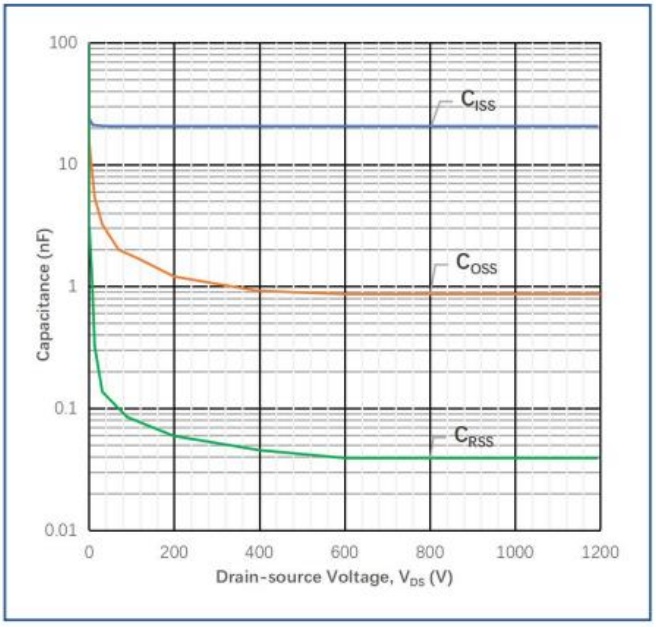


**Figure 7**

Typical Capacitances vs. Drain-source Voltage

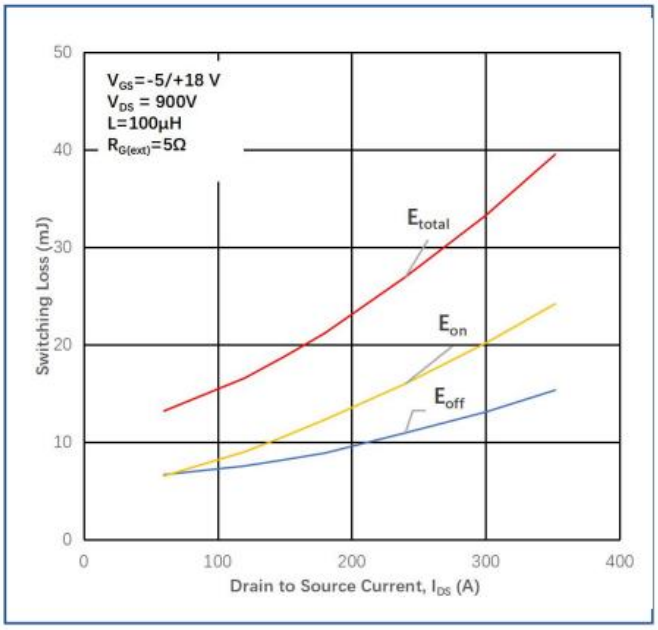


**Figure 8**

Inductive Switching Energy vs. Drain Current

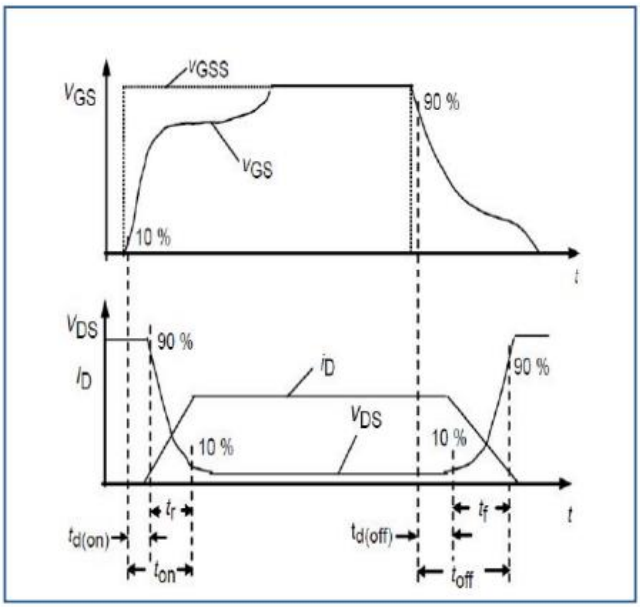


**Figure 9**

Switching Time Description

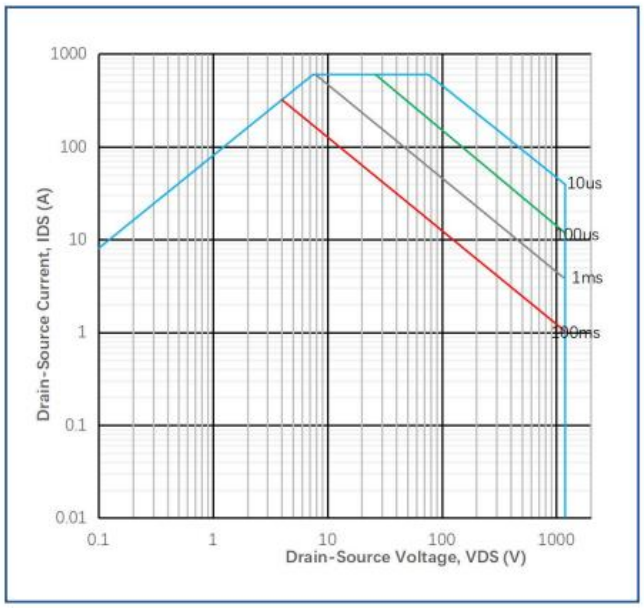


**Figure 10**

Safe Operating Area

## Circuit Diagram

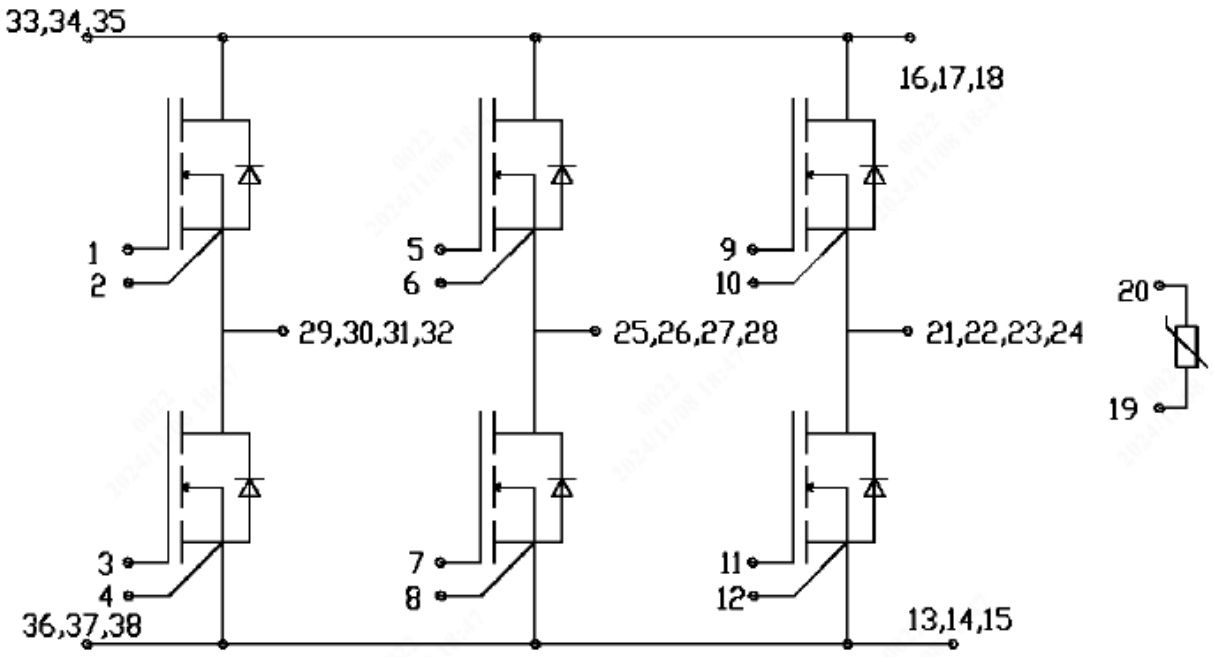

## Package Drawing (mm)

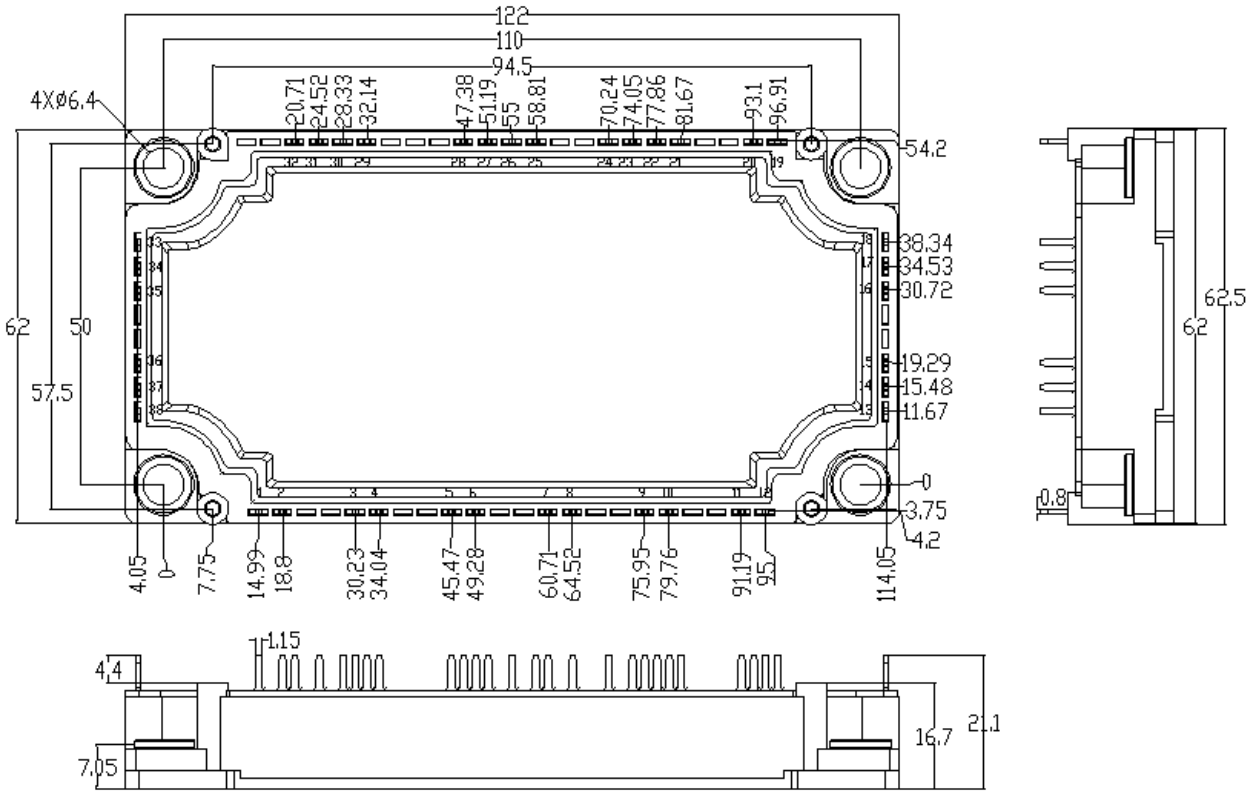


| Revision version | Description | Date |
|---|---|---|
| 1.0 | Initial | 05.2025 |